DRAWING No 078857-00	IF IN DOUBT ASK	DO NOT SCALE	ALL DIMNS IN MM	THIRD ANGLE PROJECTION

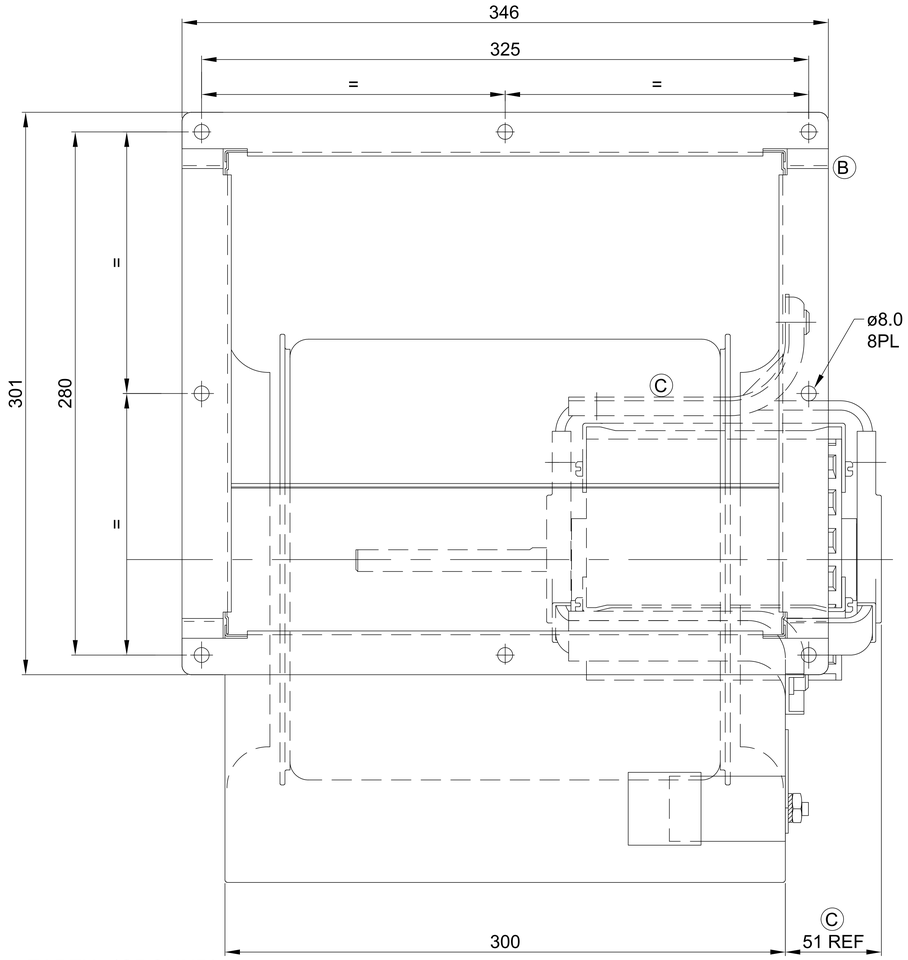

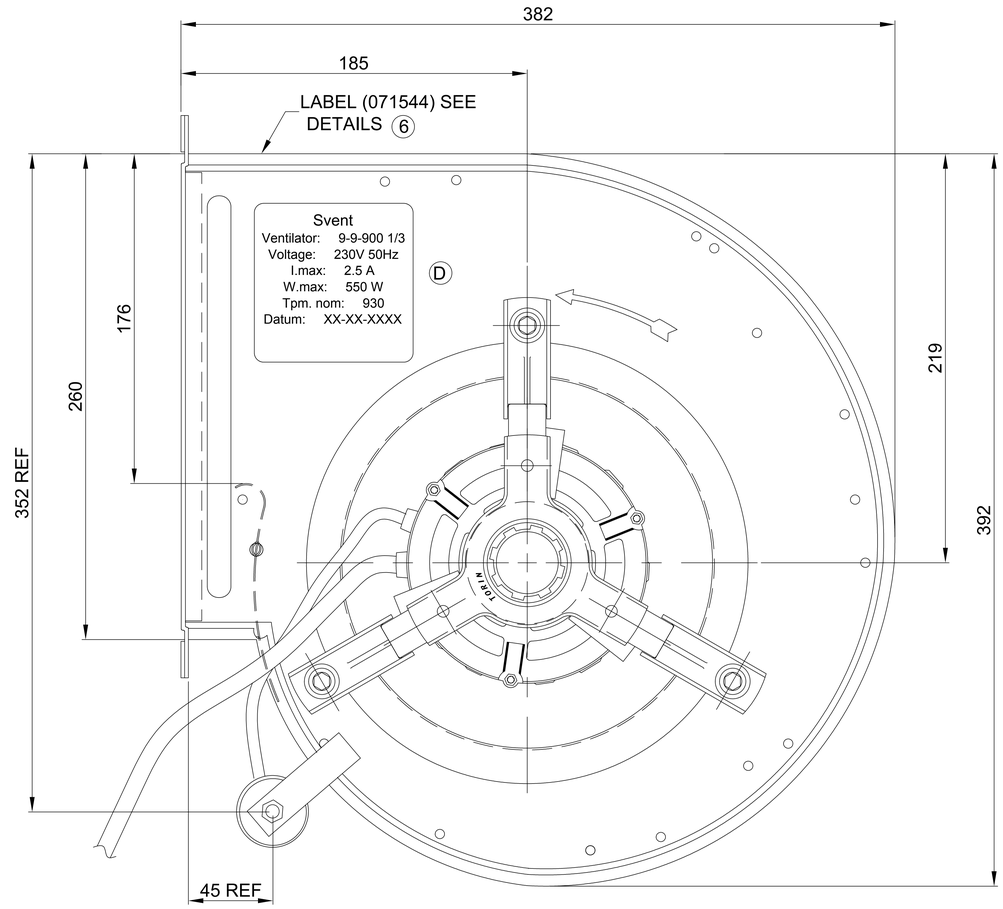

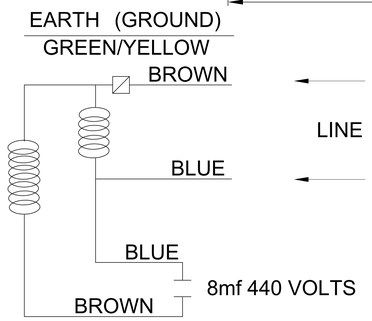

6

DDC241-241 230V 50Hz 2.5AMPS
245W 6 POLE 1 SPEED CLASS F 8mfd
PART No.078857-00 DATE CODE WW/YY
TORIN LIMITED, SWINDON, ENGLAND.

LABEL (071544) DETAILS

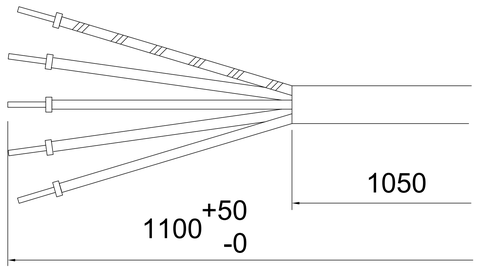

DDC241-241 FLG SPL.
MOTOR 073748-01 230V 50Hz
245W 6 POLE 1 SPEED CLF
TORIN PART No.AU078857-00
BEVEJA 241-241-9 B

REV	CNNo	DATE	BY
A	DRAWN	22/12/99	JM
B	16012	31/05/02	DA
C	16019	15/07/02	DA
D	16031	02/09/02	DA
5	16448	15/09/04	GC
6	16631	22/04/05	DA

Sifan-Torin
Torin Limited
SWINDON ENGLAND

THIS DRAWING AND SPECIFICATIONS IS THE EXCLUSIVE PROPERTY OF TORIN LIMITED, ISSUED IN STRICT CONFIDENCE AND SHALL NOT BE REPRODUCED, COPIED OR USED FOR ANY REASON OTHER THAN WHICH IT IS ISSUED, WITHOUT THE WRITTEN PERMISSION OF TORIN LIMITED.

DRAWN	JM	22/12/99	THIRD ANGLE PROJECTION
CHECKED			
APPROVED			
MATERIAL			TOLERANCES UNLESS OTHERWISE SPECIFIED
SPECIFICATION	GALV		X.X ± 1.0
FINISH	NATURAL		XX. ± 2.0
SCALE	N.T.S		ANGLES ± 0.5°

TITLE
DDC241-241 230V 50Hz

CAD/DIRECTORY/PATH
ASY/DDC/241-241/WF/078857-00

DRAWING No.
078857-00